PREFORMED LINE PRODUCTS
The connection you can count on.

RAPTOR CLAMP™ Diverters

Be sure to read and completely understand this procedure before applying product. Be sure to select the proper size PREFORMED™ product before application.

Step #1 Open the clamp by pulling apart the jaws until it is locked in the open postition.

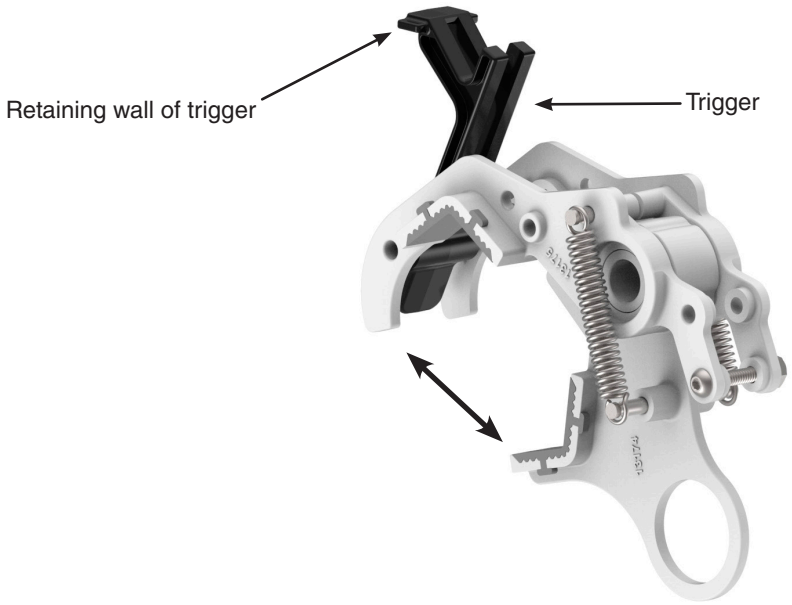

Watch the SDS Clamp Installation Video

*Note: Actual clamp is black

Step #2 Rotate the trigger until its retaining wall rests in the clamp.

Place your index finger on the top of the trigger to hold the retaining wall against the clamp body. The thumb and middle finger will be on opposites sides of the clamp.

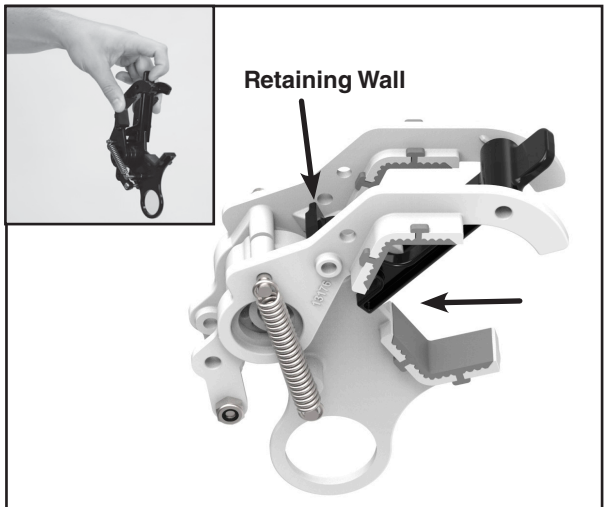

IMPORTANT - Keep fingers clear of the clamp mechanism when setting the trigger.

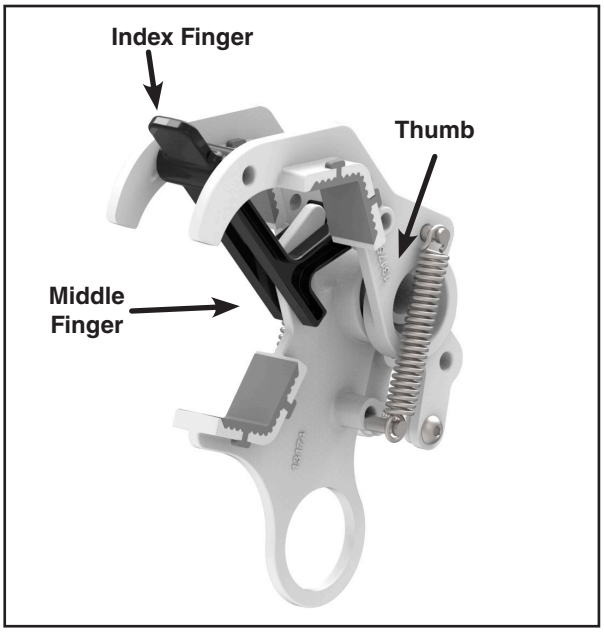

©2020 Preformed Line Products. All rights reserved.

Step #3 To set the trigger, continue holding the clamp as described in Step 2 and using the opposite hand to push (A) Loop forward. The trigger will hold the jaw open.

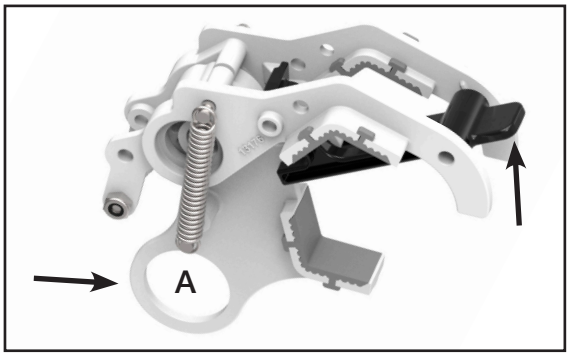

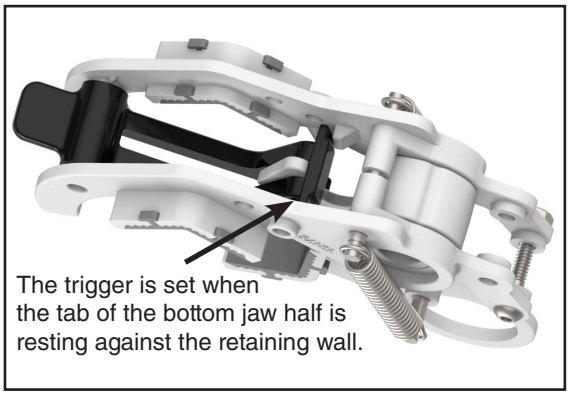

The trigger is set when the tab of the bottom jaw half is resting against the retaining wall.

Step #4 Place the clamp over the conductor/strand at the desired location. Lower the clamp onto the conductor/strand until the trigger is activated and the clamp is latched onto the conductor/strand.

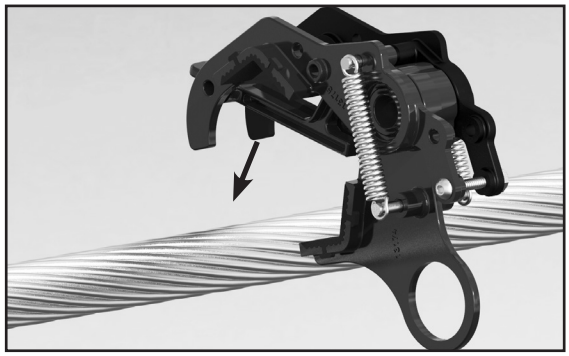

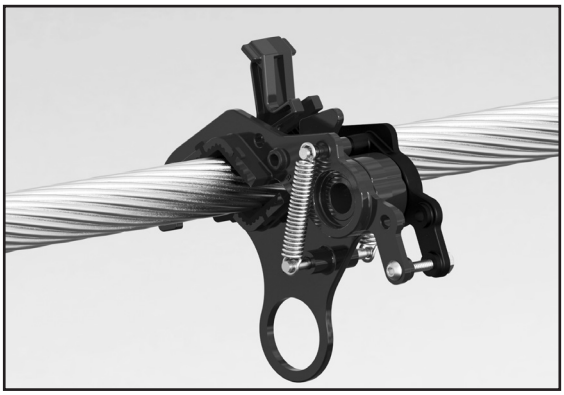

SAFETY CONSIDERATIONS

This application procedure is not intended to supersede any company construction or safety standards. This procedure is offered only to illustrate safe application for the individual. **FAILURE TO FOLLOW THESE PROCEDURES MAY RESULT IN PERSONAL INJURY OR DEATH.**

This product is intended for a single (one time) use and for the specified application.
Do not reuse or modify this product under any circumstances.

This product is intended for use by trained technicians only. **This product should not be used by anyone who is not familiar with, and not trained to use it.**

When working in the area of energized lines, extra care should be taken to prevent accidental electrical contact. Be sure to wear proper safety equipment per your company protocol.

For proper performance and personal safety, be sure to select the proper size PREFORMED™ product before application.

PREFORMED products are precision devices. To ensure proper performance, they should be stored in cartons under cover and handled carefully.

PREFORMED LINE PRODUCTS

P.O. Box 91129, Cleveland, Ohio 44101 • 440.461.5200 • preformed.com • email: inquiries@preformed.com

SP3519-1