PREFORMED LINE PRODUCTS
The connection you can count on.

MARCH 2020

FIBERLIGN® ADSS Dome Band Mount Bracket 12" Max with CSI

Be sure to read and completely understand this procedure before applying product. Be sure to select the proper PREFORMED™ product before application.

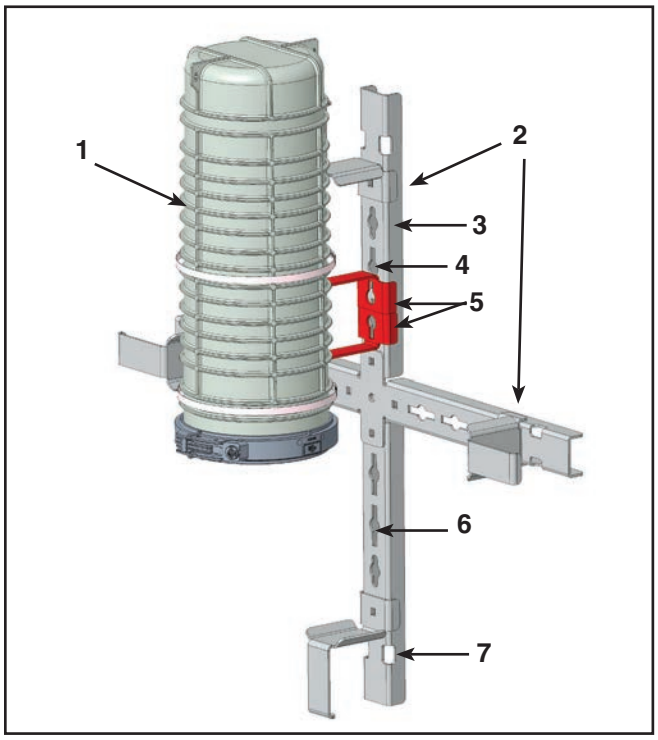

NOMENCLATURE

1. COYOTE® Dome or COYOTE Terminal Dome Closure (Not included - Ordered Separately)
2. Cable Keeper (1)
3. Crossarm
4. Key Hole for Pole Mount; accepts 5/8" Bolt, 2 places
5. 12" Max Dome Mounting Bracket with Cable Storage Interface
6. Fastener holes for closure mount; accepts ½" Carriage Bolt or Hex Head, 6 per crossarm
7. Band Slot; accepts 1-1/4" wide band

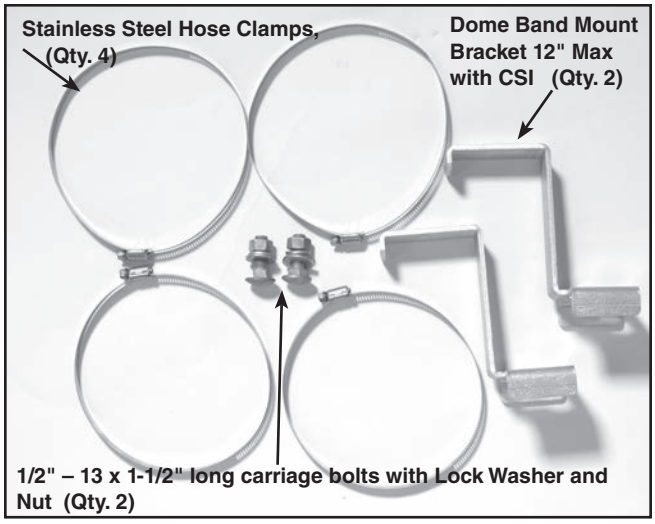

12" Max Dome Mounting Bracket w/ CSI Kit

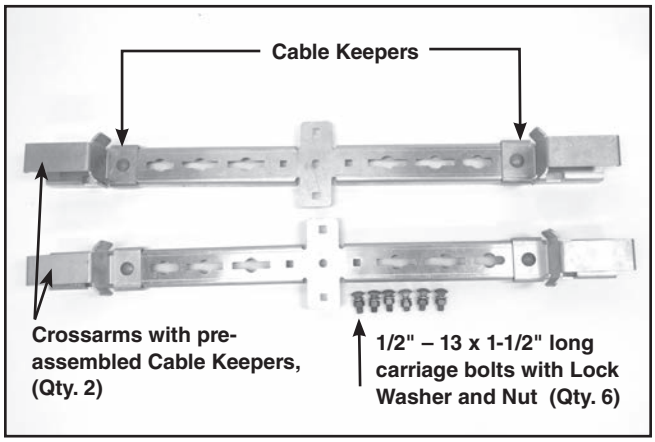

Vertical Cable Storage Kit - Catalog No. 8004072E

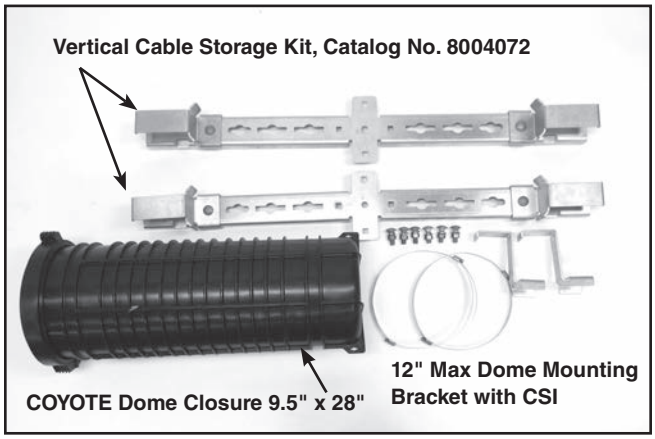

Vertical Cable Storage Kit, COYOTE Dome Closure 9.5" x 28", 12" Max Mounting Bracket Kit

© 2020 Preformed Line Products Company. All rights reserved.

Step #1 **Assemble ADSS Cable Storage Crossarms**

Join the 2 Crossarms using (4) ½" Carriage Bolts, lock washers, flat washers, and nuts (supplied) at the intersection of the crossarms as shown below. Place ½" flat washers, ½" lock washers and ½" nuts inside the crossarm channel and tighten with a wrench. (Approximate torque value of 40 ft.-lbs.)

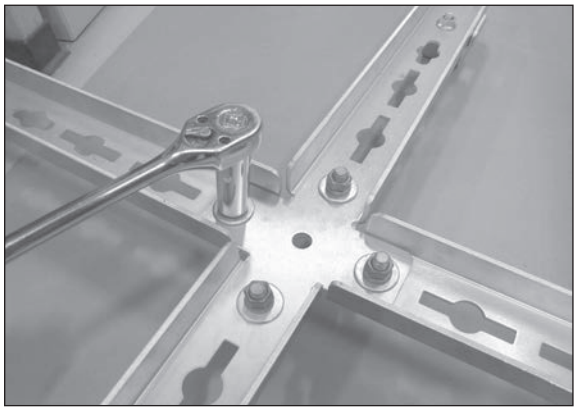

Step #2 **ADSS Cable Storage Pole Attachment: Double Arming bolt, through bolt, or band through band slot**

For wood pole mount, drill 5/8" through hole for the bolt or the double arming (DA) bolt application. Leave 2" of exposed thread for the DA bolt application and install the nut with the lock washer and flat washer. For banding, slide through the band slot and secure. Maximum band width is 1.25". Once the bracket is secured, cable can be stored in the 33" loop contained within the 4 cable keepers. For cable storage with closures, see Step 3.

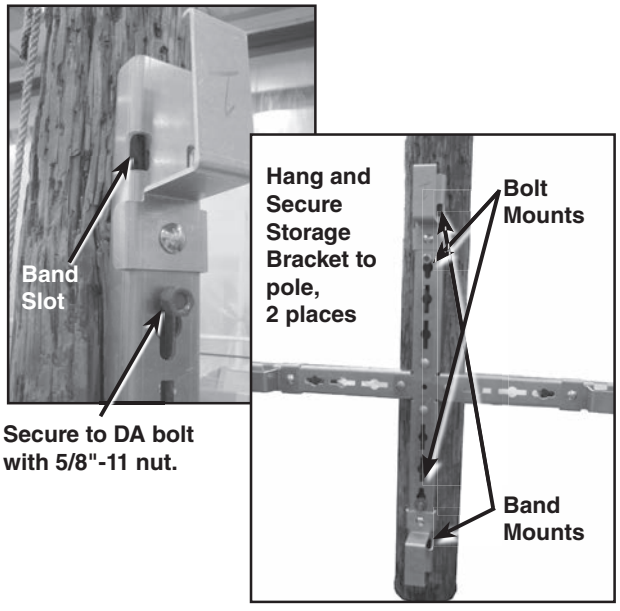

Step #3 **Assemble 12" Max Dome Mounting Bracket Kit, Join Hose Clamps**

The following steps apply to all COYOTE® Dome Closures and COYOTE® Terminal Dome Closures.

Pre-assemble (2) hose clamps together to allow for dome mounting. A total of (2) combined hose clamps are required for mounting, for top and bottom mounting bracket.

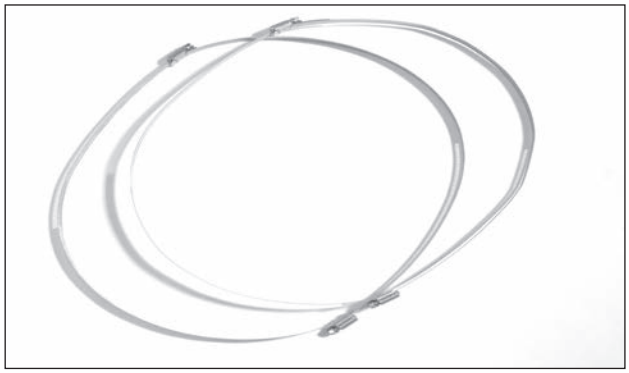

Assemble the Fasteners

Pre-assemble a carriage bolt with flat washer, lock washer, and nut for each dome bracket.

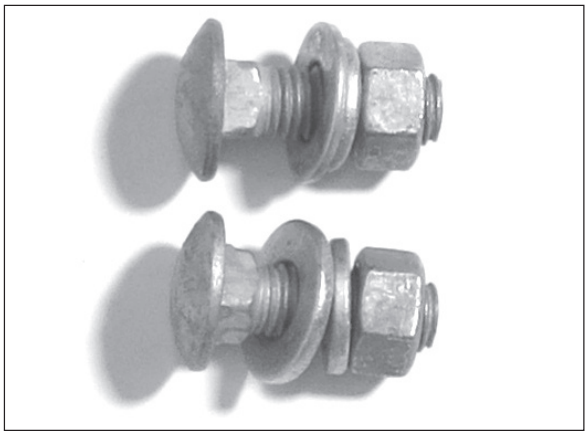

Mounting Bracket Positioning

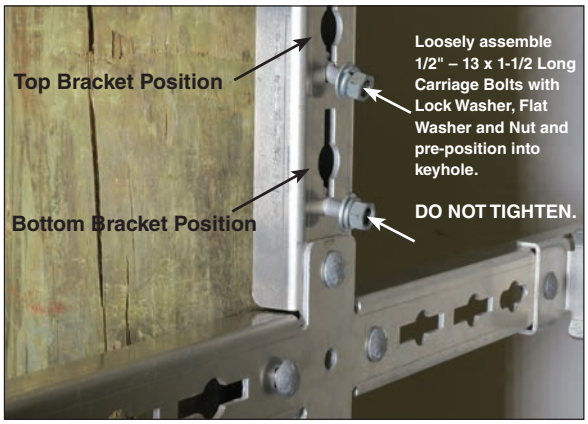

The suggested positioning on the ADSS cable storage crossarm helps create an adequate diameter drip loop leading from the bottom of the dome to the adjoining cable stored within the cable storage crossarm keepers.

Step #4 Closure Mounting Option

Secure the dome mounting brackets to the dome with hose clamps. The hose clamps will need to be positioned in the channels between the ribs of the dome closure. For optimal application, the bottom bracket should be clamped at channel #2. For the top bracket, it is suggested that it is secured between channels #9-11.

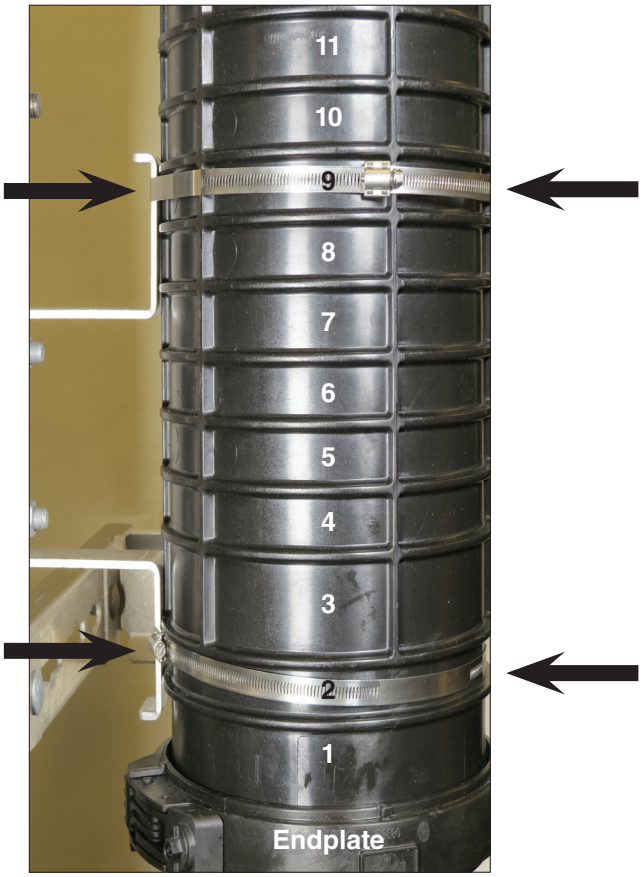

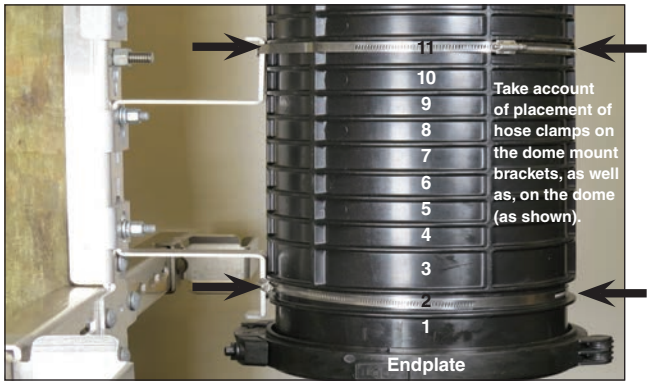

To allow for better stability, secure the back face of the brackets along any vertical spine, depending on location of cables extending out of closure. This will keep brackets flush and secure to the dome while tightening, as well as, limiting any potential for movement once fully assembled and mounted.

Step #4 Continued

Step #5 Mounting Dome onto Vertical Cable Storage

After wrapping slack cable onto cable storage keeper brackets, leave the length for proper drip loop before hanging the dome. Slide the dome mounting brackets onto the Vertical Cable Storage and engage with preassembled carriage bolts, as suggested in Step #3. Tighten the top carriage bolt first by hand. This will help provide stability while you determine the final position of the bottom bracket, as the bolt will want to slide upwards towards the keyhole.

Step #5 **Continued**

Not Correct

The bottom band mount bracket will need to be fully secured into position first. Make sure that the bracket is flush against the Vertical Cable Crossarm and does not interfere with the carriage bolt joining the two crossarms.

Correct

Step #6 **Installation Complete**

COYOTE® Dome Closure / COYOTE® Terminal Dome Closure 9.5" x 28" mounted to FIBERLIGN® ADSS Cable Storage.

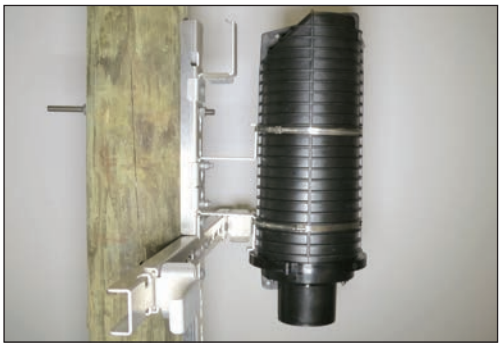

*FOSC™450-D6 Closure mounted to FIBERLIGN® ADSS Cable Storage

*FOSC™ is a trademark of CommScope.

SAFETY CONSIDERATIONS

This application procedure is not intended to supersede any company construction or safety standards. This procedure is offered only to illustrate safe application for the individual.
FAILURE TO FOLLOW THESE PROCEDURES MAY RESULT IN PERSONAL INJURY OR DEATH.

Do not modify this product under any circumstances.

This product is intended for use by trained technicians only. **This product should not be used by anyone who is not familiar with, and not trained to use it.**

When working in the area of energized lines, extra care should be taken to prevent accidental electrical contact. Be sure to wear proper safety equipment per your company protocol.

For proper performance and personal safety, be sure to select the proper size PREFORMED™ product before application.

PREFORMED products are precision devices. To ensure proper performance, they should be stored in cartons under-cover and handled carefully.